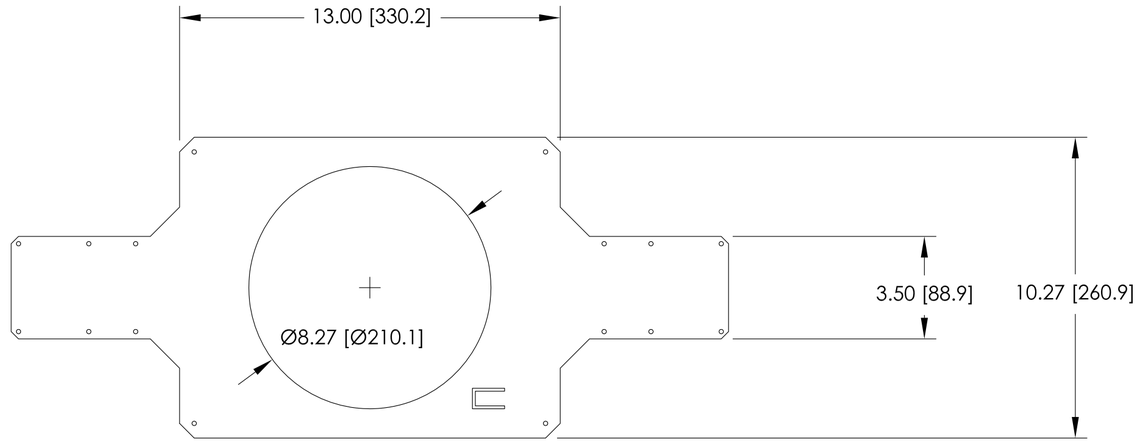

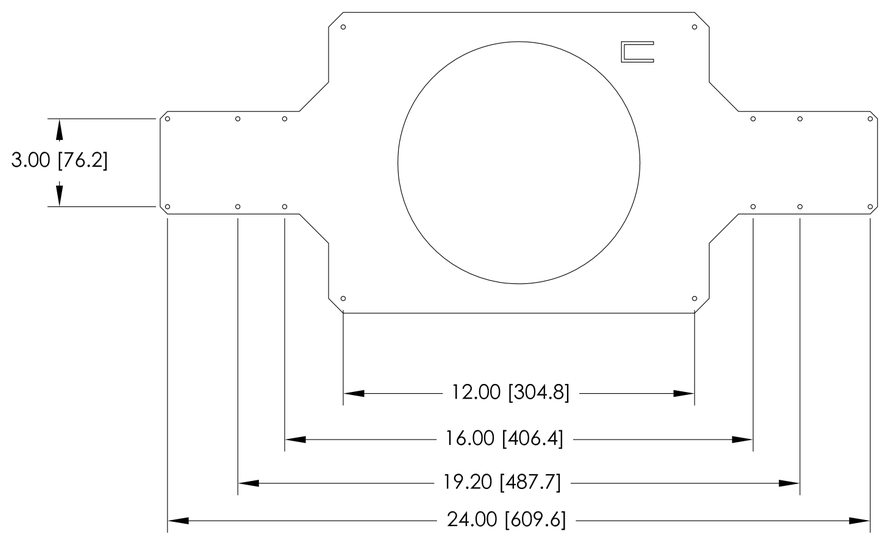

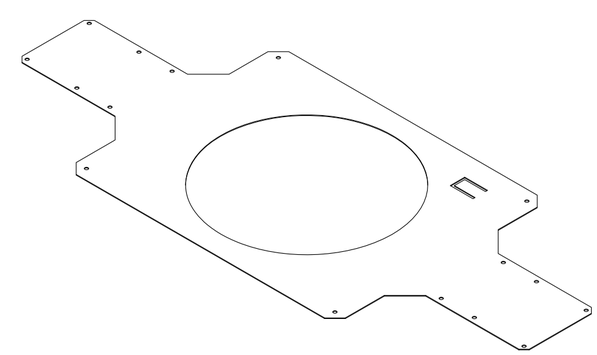

PROPRIETARY AND CONFIDENTIAL

THE INFORMATION CONTAINED IN THIS DRAWING IS THE SOLE PROPERTY OF SOUND ADVANCE. ANY REPRODUCTION IN PART OR AS A WHOLE WITHOUT THE WRITTEN PERMISSION OF SOUND ADVANCE IS PROHIBITED.

NEXT ASSY	USED ON
APPLICATION	

UNLESS OTHERWISE SPECIFIED:
DIMENSIONS ARE IN INCHES [MM]
TOLERANCES:
FRACTIONAL ±
ANGULAR ±
TWO PLACE DECIMAL ±
THREE PLACE DECIMAL ±
INTERPRET GEOMETRIC TOLERANCING PER:
MATERIAL
AWG#20 MILD STEEL
FINISH
RUST PREVENTIVE
DO NOT SCALE DRAWING

	NAME	DATE
DRAWN	A.B.	5-Aug-08
CHECKED		
ENG APPR.		
MFG APPR.		
Q.A.		

COMMENTS:

SOUND ADVANCE
212 AVENIDA FABRICANTE
SAN CLEMENTE, CA. 92672

TITLE: **CM660 METAL ROUGH-IN BRACKET**

SIZE	DWG. NO.	REV
C		

SCALE: 1:4 | WT: 1.0 LBS | SHEET 1 OF 1