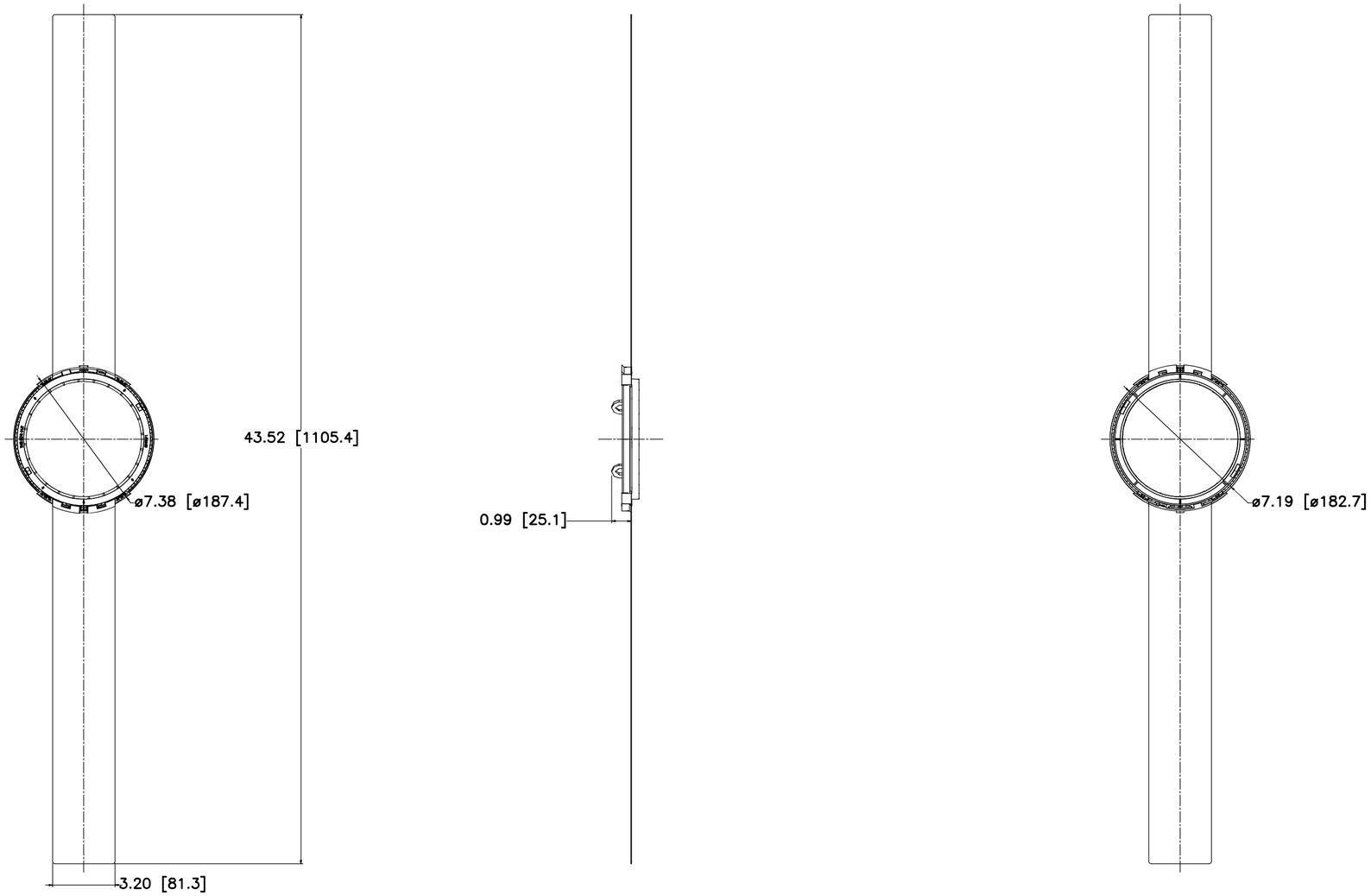

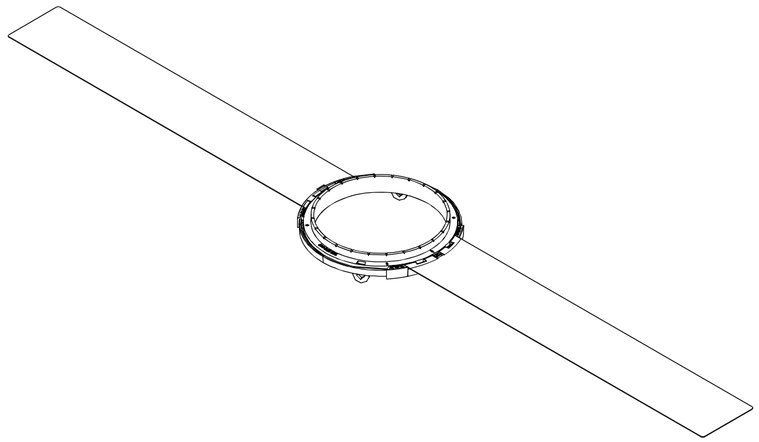

SMALL ROUND FLEXBRACKETS

REV.	
DRAWN - PART NUMBER	92471
SIZE	C
DRAWN BY: DH	
RELEASED ON: 18JUN2015	
SCALE: 5:1	
SHEET: 1 OF 1	

SONANCE
212 Avenida Fabricante, San Clemente, CA. 92630
800 582-7777 949 492-7777 FAX 949 361-5579
www.sonance.com